Multican Spare Part

Mounting instructions

MHPS Italia S.r.l., Company subject to the direction and coordination of Konecranes Plc., P.O. Box 661 (Koneenkatu 8), FI-05801 Hyvinkää, Finland.
Headquarters: Via Borgogna 8, 20122 Milano (MI), Italy. Paid-in capital € 1.000.000, REA: MI – 2108478, **konecranes.com**
Companies Register and Fiscal Code: 09708220968, VAT ID IVA: IT09708220968, PEC: mhpsitalia@legalmail.it, Operations Motronica Division:
Corso F.M. Perrone 29-31, 16152 Genova,el. +39 010 61422 1, Fax +39 010 61422 75

SUMMARY

ACRONYMS

SSR	safety software requirements
ASR	architecture software requirement
DSR	design software requirement
MSR	module software requirement
TCR	test cases requirement
TR	test report
SRESW	safety related embedded software
SRASW	safety related application software
LLMI	Longitudinal Load Moment Indicator
LLMC	Longitudinal Load Moment Controller
MTC	Model test coverage
ME	Model editor
RMG	requirement management gateway
CVK	compiler verification kit
KCG	code generator
REP	Residual error probability
FER	Frame error ratio
P2P	Peer to peer (revision)
RA	Risk assessment

Chapter 1 Introduction.

The aim of this document is to provide installation instructions for the following items:

NEW ITEM CODE	'OLD' ITEM CODE	DESCRIPTION
1130801001000	1130801000300	ECU MULTICAN V2.0 4 INPUTS 4 OUTPUTS (STABILIZER)
1130801001100	1130801000400	ECU MULTICAN V2.0 8 OUTPUTS GEAR
1130801001100	1130801000400	ECU MULTICAN V2.0 8 OUTPUTS DAMPING

Table I: List of Multican devices

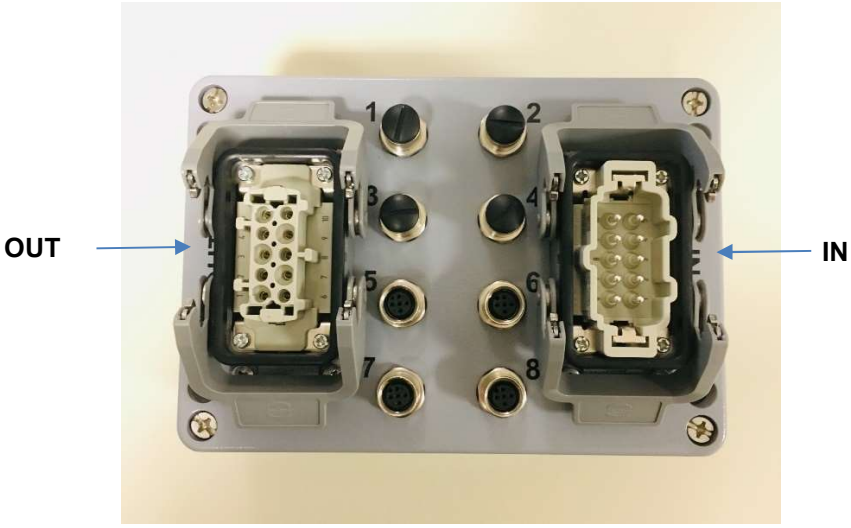

Figure 1

Figure 2 1010204003500 WH CNT 10PF CAN+PS-FREE L.10MT

Section 1.1 Kit composition.

Subsection 1.1.1 Gear

Ordering a Gear Multican spare part with code 1130801001100 include a new set of components as we can see into Table II.

MOTRONICA CODE	DESCRIPTION
1130801001100	ECU MULTICAN V2.0 8 OUTPUTS GEAR
Include the following parts:	
1130904000500 (Fig.3)	CAN TERM. 120 OHM CNT CSHM 10PM (supplied assembled)
1010204003500 (Fig.2)	WH CNT 10PF CAN+PS-FREE L.10MT (supplied assembled)

Table II: Components for the Gear Multican spare part.

Subsection 1.1.2 Damping

Ordering a Damping Multican spare part with code 1130801001200 include a new set of components as we can see into Table III.

MOTRONICA CODE	DESCRIPTION
1130801001200	ECU MULTICAN V2.0 8 OUTPUTS DAMPING
Include the following parts:	
1130904000500 (Fig.3)	CAN TERM. 120 OHM CNT CSHM 10PM (supplied assembled)
1010204003600 (Fig.2)	WH CNT 10PF CAN+PS-FREE L.25MT (supplied assembled)

Table III: Components for the Damping Multican spare part.

Subsection 1.1.3 Stabilizer

Ordering a Stabilizer Multican spare part with code 113080100000 include a new set of components as we can see into Table IV.

MOTRONICA CODE	DESCRIPTION
1130801001000	ECU MULTICAN V2.0 4 INPUTS 4 OUTPUTS
Include the following parts:	
1130904000500 (Fig.3)	CAN TERM. 120 OHM CNT CSHM 10PM (supplied assembled)
1010204003700 (Fig.2)	WH CNT 10PM CAN+PS-FREE L.8MT (supplied assembled)

Table IV: Components for the Stabilizer Multican spare part.

Section 1.2 Backward compatibility.

The only difference between the new and the 'old' Multican is the lack of the third 7-poles connector for auxiliary power supply and can-bus into the new device. This kind of spare part is meant for machine with up to three Multican in cascade, so it won't need any auxiliary power supply to work correctly.

Section 1.3 Tools.

The following tools are mandatory:

- Phillips screwdriver PH 2 (required to cover fixing items)
- Slotted screwdriver 4mm (required for securing cables to terminal).
- 4 fixing screws with washers (Recommended M6x40, cylindric head) (required for securing the box).
- Electrician scissors (be careful: the cable section to cut is at least Ø12,4mm)
- Tool for drilling (required to drill fixing support)
- Multimeter.
- Installation instructions.

Chapter 2 Instructions

Section 2.1 Machine with single multican.

Subsection 2.1.1 Gear Multican

The cabling interface for the Gear Multican can be observed at Figure 3. To connect the new Multican we need to disconnect all the cabling from the old one and remove it from its spot. In the same way we need to remove the old cabling from the main electrical cabin. Take note about the position of the cabling for the EV, you need to reconnect them on the new system.

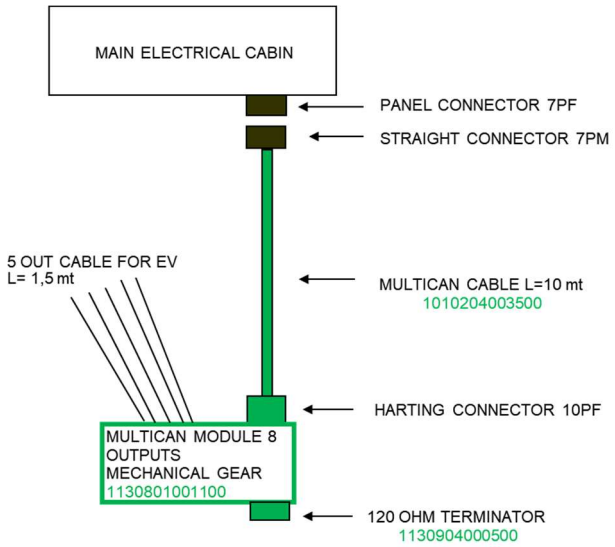

Figure 3: Cabling interface for gear Multican.

After this preliminary action, we can mount the new device.
Plug the connector of the wiring harness to the 'IN' position of the new Multican and connect the free wires to a straight connector 7PM (It could be already provided mounted). The straight connector 7PM need to be connected to the panel connector 7PF.
To finish the assembly, connect the EV cable to the position they were previously connected to the old Multican.

Subsection 2.1.2 Damping Multican with Spreader CAN

The cabling interface for the damping Multican can be observed at Figure 4. To connect the new Multican we need to disconnect all the cabling from the old one and remove it from its spot. In the same way we need to remove the old cabling from the main electrical cabin. Take note about the position of the cabling for the EV, you need to reconnect them on the new system.

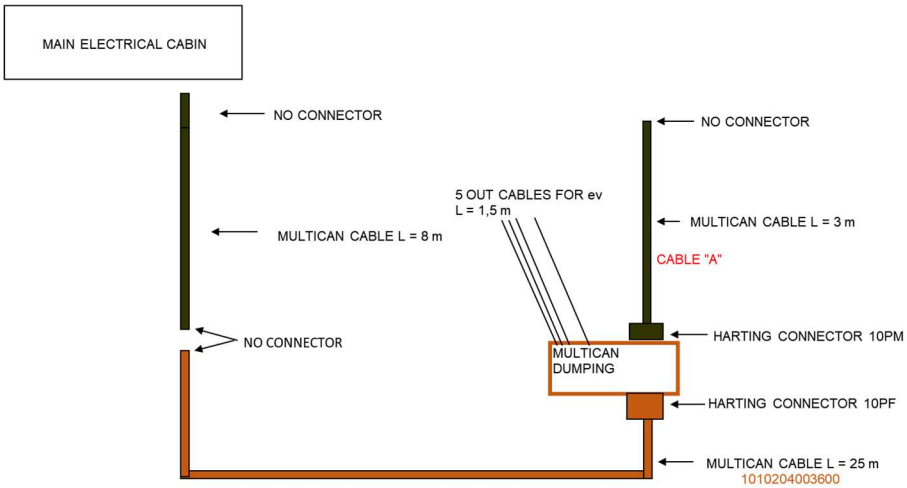

Figure 4: Cabling interface for damping Multican + spreader CAN.

The procedure to replace the damping Multican in this kind of configuration is the following:

1. Unplug the 7PM connectors from the old system and remove the wiring harness.
2. Memorize the position of the M12 connector, then unplug them.
3. Remove the old system from the machine.
4. Fix to the machine the new Multican (1130801001200).
5. Connect the Harting connector of the Multican cable (1010204003600) to the damping Multican at 'IN' connector.
6. Connect the other side of the Multican cable to the wiring harness connected to the main electrical cabin. The cabling may have connectors to be plugged.
7. Connect the Multican cable from the spreader to the connector 'OUT' of the Multican.
8. Plug the wiring harness for EV to the M12 connector to the spot memorized previously on the Multican device.

Section 2.2 Machine with gear and damping multican in cascade.

The cabling interface for the damping Multican can be observed at Figure 5. We can have 3 different installation option:

- Changing only the gear multican system
- Changing only the damping multican system
- Changing both the multican systems.

ATTENTION: if you have already replaced one device, please look for the mounting instructions for all the device that are replaced and already replaced (e.g. I have already replaced gear multican and I need to replace the damping. I will need the guide at Subsection 2.2.3).

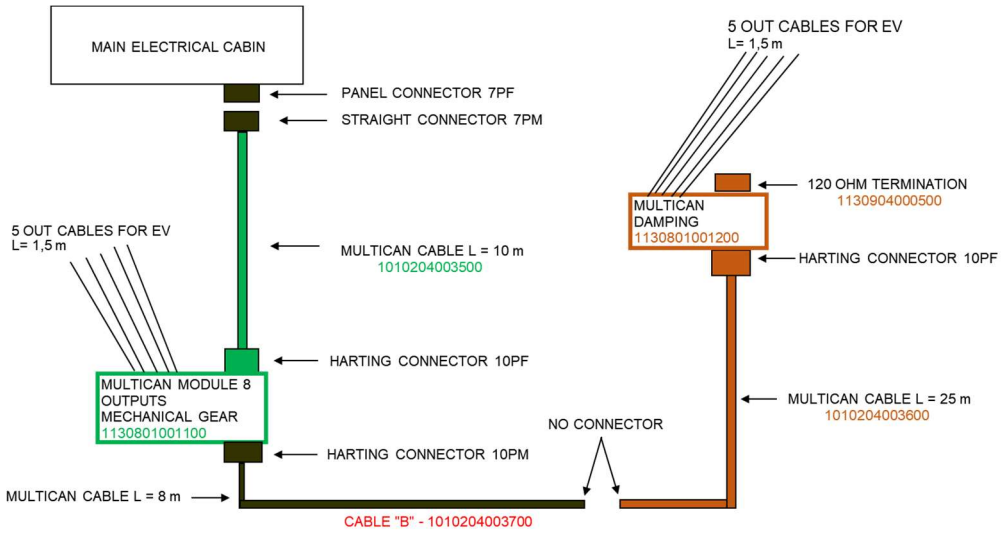

Figure 5: Cabling interface for gear + damping Multican.

ATTENTION: if you have already replaced one device, please look for the mounting instructions for all the device that are replaced and already replaced (e.g. I have already replaced gear multican and I need to replace the damping. I will need the guide at Subsection 2.2.3).

Subsection 2.2.1 Changing gear multican

In the case you must replace only the multican for mechanical gear, you will need to order separately the multican Cable “B” with code 1010204003700.

The procedure to replace the gear multican in this kind of configuration is the following:

1. Unplug the 7PM connector from the old system and remove the wiring harness.
2. Memorize the position of the M12 connector, then unplug them.
3. Remove the old system from the machine.
4. Fix to the machine the new multican system (1130801001100).
5. Connect the Harting connector of the multican cable (1010204003500) to the new multican system at ‘IN’ connector.
6. Connect the other side of the multican cable to the panel connector 7PF on the main elettrical cabin. A straight connector 7PM may be already mounted on the cable.
7. Plug the wiring harness for EV to the M12 connector to the spot memorized previously on the gear multican device
8. Connect the Harting connector of the Cable “B” (1010204003700) to the ‘OUT’ connector on the gear multican device.
9. Connect the other side of Cable “B” to the multican cable from the damping multican. The cabling may have connectors to be plugged.

Subsection 2.2.2 Changing damping multican

The procedure to replace the damping multican in this kind of configuration is the following:

9. Unplug the 7PM connectors from the old system and remove the wiring harness.
10. Memorize the position of the M12 connector, then unplug them.
11. Remove the old system from the machine.
12. Fix to the machine the new multican system (1130801001200).
13. Connect the Harting connector of the multican cable (1010204003600) to the damping multican system at 'IN' connector.
14. Connect the other side of the multican cable to the wiring harness connected to the 'OUT' connector of the gear multican. The cabling may have connectors to be plugged.
15. Connect the 120 Ohm Terminator (1130904000500) to the 'OUT' connector of the damping multican device
16. Plug the wiring harness for EV to the M12 connector to the spot memorized previously on the multican device.

Subsection 2.2.3 Changing both multican

In the case you must replace both the multican systems, you will need to order separately the multican Cable "B" with code 1010204003700.

The procedure to replace the gear multican in this kind of configuration is the following:

1. Follow the procedure to change the gear multican system, skipping step 9.
2. Follow the procedure to change the damping multican system, skipping step 6.
3. Connect the free side of multican cable for damping (1010204003600) to the free side of Cable "B" (1010204003700). The cabling may have connectors to be plugged.

Connect the other side of Cable "B" to the multican cable from the damping multican. The cabling may have connectors to be plugged.

Section 2.3 Machine with gear, damping and stabilizer multican in cascade

The cabling interface for the damping Multican can be observed at Figure 4.

We can have 3 different installation option:

- Changing only the gear multican system
- Changing only the damping multican system
- Changing only the stabilizer multican system
- Changing only the gear and damping multican system
- Changing only the gear and stabilizer multican system
- Changing only the damping and stabilizer multican system
- Changing all the multican systems.

ATTENTION: if you have already replaced one or more devices, please look for the mounting instructions for all the device that arereplaced and already replaced (e.g. I have already replaced stabilizer multican and I need to replace the gear and damping. I will need the guide at Subsection 2.3.7).

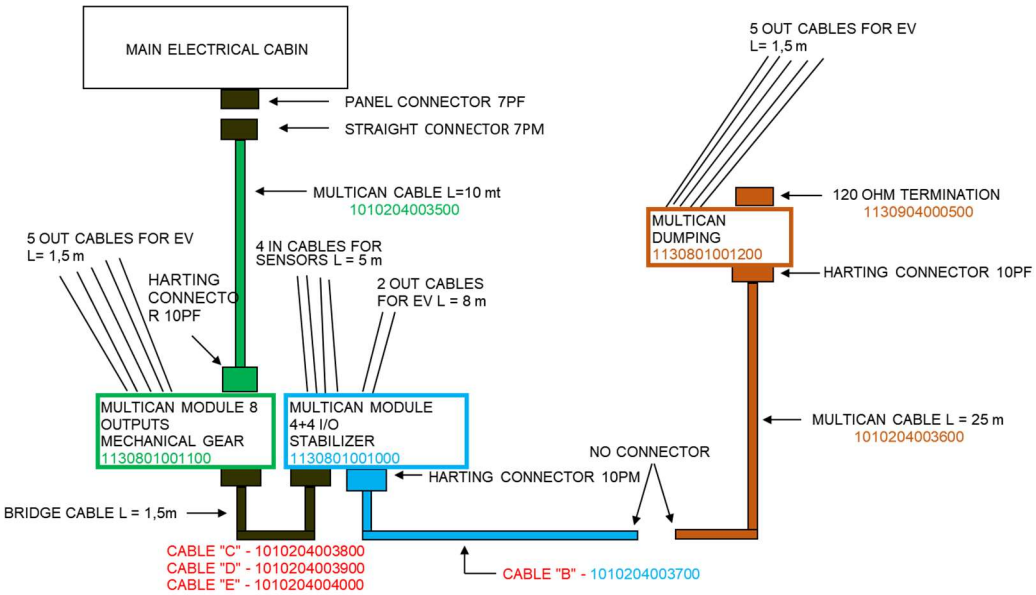

Figure 6: Cabling interface for gear + damping + stabilizer Multican.

Subsection 2.3.1 Changing gear multican

In the case you must replace only the multican for mechanical gear, you will need to order separately the multican Cable “C” with code 1010204003800.

The procedure to replace the gear multican in this kind of configuration is the following:

1. Unplug both the 7PM connector from the old system and remove the wiring harness. Disconnect the cable from ‘OUT’ connector also from the stabilizer multican side.
2. Memorize the position of the M12 connector, then unplug them.
3. Remove the old system from the machine.
4. Fix to the machine the new multican system (1130801001100).
5. Connect the Harting connector of the multican cable (1010204003500) to the new multican system at ‘IN’ connector.
6. Connect the other side of the multican cable to the panel connector 7PF on the main elettrical cabin. A straight connector 7PM may be already mounted on the cable.
7. Plug the wiring harness for EV to the M12 connector to the spot memorized previously on the gear multican device.

8. Connect the Harting connector of the Cable “C” (1010204003700) to the ‘OUT’ connector on the gear multican device.
9. Connect the other side of Cable “C” to the connector ‘IN’ of the stabilizer multican system. A straight connector 7PM may be already mounted on the cable.

Subsection 2.3.2 Changing damping multican

The procedure to replace the damping multican in this kind of configuration is the following:

1. Unplug the 7PM connectors from the old system and remove the wiring harness.
2. Memorize the position of the M12 connector, then unplug them.
3. Remove the old system from the machine.
4. Fix to the machine the new multican system (1130801001200).
5. Connect the Harting connector of the multican cable (1010204003600) to the damping multican system at ‘IN’ connector.
6. Connect the other side of the multican cable to the wiring harness connected to the ‘OUT’ connector of the stabilizer multican. The cabling may have connectors to be plugged.
7. Connect the 120 Ohm Terminator (1130904000500) to the ‘OUT’ connector of the damping multican device
8. Plug the wiring harness for EV to the M12 connector to the spot memorized previously on the multican device

Subsection 2.3.3 Changing stabilizier multican

In the case you must replace only the multican for stabilizer, you will need to order separately the multican Cable “D” with code 1010204003900.

The procedure to replace the stabilizer multican in this kind of configuration is the following:

1. Unplug both the 7PM connector from the old system and remove the wiring harness. Disconnect the cable from ‘IN’ connector also from the gear multican side.
2. Memorize the position of the M12 connector, then unplug them.
3. Remove the old system from the machine.
4. Fix to the machine the new multican system (1130801001100).
5. Connect the Harting connector of the multican cable (1010204003700) to the new multican system at ‘OUT’ connector.
6. Connect the other side of the multican cable to the free side of the damping multican cable. A connector may be already mounted on the cable.
7. Plug the wiring harness for EV and sensors to the M12 connector to the spot memorized previously on the stabilizer multican device.
8. Connect the Harting connector of the Cable “D” (1010204003900) to the ‘IN’ connector on the gear multican device. A straight connector 7PF may be already mounted on the cable.
9. Connect the other side of Cable “D” to the connector ‘OUT’ of the gear multican system. A straight connector 7PM may be already mounted on the cable

Subsection 2.3.4 Changing gear and damping multican

In the case you must replace only the multican for mechanical gear and damping, you will need to order separately the multican Cable “C” with code 1010204003800.

The procedure to replace the gear multican in this kind of configuration is the following:

1. Follow the procedure to change the gear multican system.
2. Follow the procedure to change the damping multican system.

Subsection 2.3.5 Changing gear and stabilizer multican

In the case you must replace only the multican for mechanical gear and stabilizer, you will need to order separately the multican Cable “E” with code 1010204004000.

The procedure to replace the gear multican in this kind of configuration is the following:

1. Follow the procedure to change the gear multican system, skipping step 8 and 9.
2. Follow the procedure to change the stabilizer multican system, skipping step 8 and 9.
3. Connect the Cable “E” (1010204004000) to the connector ‘OUT’ of the gear multican system and to the connector ’IN’ of the stabilizer multican system. A straight connector 7PF may be already mounted on the cable.

Subsection 2.3.6 Changing damping and stabilizer multican

In the case you must replace only the multican for damping and stabilizer, you will need to order separately the multican Cable “D” with code 1010204003900.

The procedure to replace the stabilizer multican in this kind of configuration is the following:

1. Follow the procedure to change the damping multican system, skipping step 6.
2. Follow the procedure to change the stabilizer multican system, skipping step 8 and 9.
3. Connect the Cable “D” (1010204003900) to the connector ‘OUT’ of the gear multican system and to the connector ’IN’ of the stabilizer multican system.
4. Connect the free side of the damping multican cable (1010204003600) to the free side of the stabilizer multican cable (1010204003700).

Subsection 2.3.7 Changing all the multican

In the case you must replace all the multican system, you will need to order separately the multican Cable “E” with code 1010204004000.

The procedure to replace the gear multican in this kind of configuration is the following:

1. Follow the procedure to change the gear multican system, skipping step 8 and 9.
2. Follow the procedure to change the damping multican system, skipping step 6.
3. Follow the procedure to change the stabilizer multican system, skipping step 8 and 9.
4. Connect the Cable “E” (1010204004000) to the connector ‘OUT’ of the gear multican system and to the connector ’IN’ of the stabilizer multican system. A straight connector 7PF may be already mounted on the cable.
5. Connect the free side of the damping multican cable (1010204003600) to the free side of the stabilizer multican cable (1010204003700).

Chapter 3 Previous Kit Versions

Section 3.1 Cabling to the existent Wiring Harness

Into the electrical panel, the following device must be present and replaced:

Multican with CAN terminal on 'OUT' connector

Multican with connection on 'OUT' connector with another device

Before removing the 'old' device, disconnect all the power supply from the machine.
After that, it is possible to remove the connection between the machine and the 'old' Multican device. You should have to unplug up to eight M12 connectors and up to two 7-poles connectors. Remember to sign the connector numbers to avoid wrong reconnection on the new device.

After the removal of the 'old' device, it is possible to fix the new Multican spare part to the designed place and plug to the corresponding place all the M12 connectors.
The handling of the 7-poles connectors is quite different: you need to cut the connector and insert all the cables into the Harting 10-poles connector. The wiring matching table is described in Chapter III.

The 'IN' connector is supplied already connected to the cable (code: **1010204003500**).
To unmount the connector from the cable, unscrew the cable gland and remove the 4 screws on the connector. Unplug all the wires from their slots (the correct wiring table is showed below).

The 'IN' connector is shown into the next image: let the cable pass into the plastic cable gland PG16 (N° 1) and into the cap (N° 3) before to plug the wires to the 10-way connector (N° 2). Remember to fix the connector to the cap with the four screws on the corners.

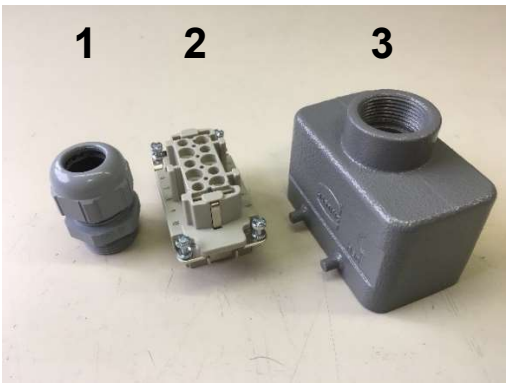

Figure 7

The connector 'OUT', corresponding to the connector CNT_10 for the 'old' device, can have two configurations:

- In the first one, the Multican is a single element on the machine or the final one of a chain. The connector ‘OUT’ on the ‘old’ device is a simple CAN terminal with a 120 ohm resistor. As in the below image, the connector ‘OUT’ is ready to be plugged to the box connector.

Figure 8

- In the second one, the device is part of a system with more Multican. In this case, you have to assemble the connector ‘OUT’ just like you did before for the ‘IN’ one.
  The connector ‘OUT’ is shown into the previous image (Fig.3-4): remove the plug from the cap and disassemble the connector removing the 4 screws into the corners; disassemble the 120 ohm resistor from the connector (n°2) let the cable pass into the plastic cable gland PG16 (n°1) and into the cap (n°3) before to plug the cables to the 10-way connector (n°2).
  Remember to fix the connector to the cap with the four screws twist off previously.

The 120 ohm resistor and the white plug are not used for this type of configuration and can be put away.

The wiring matching table is described in chapter III.

The ratio between the ‘old’ installation and the new one can be observed into Appendix ‘A’.

Section 3.2 Cabling with the new Wiring Harness

In this case, the connections between the new Multican system and the machine will be done by the wiring harness supplied.
Disconnect the existent wiring harness already mounted on the machine from the electrical cabin, remembering to sign the terminal connection pin-’OUT’ to avoid wrong reconnection of the new wiring (it will be possible to remove completely the wiring from the machine).

Plug the connector of the wiring harness to the ‘IN’ position of the new Multican and connect the free wires to the electrical cabin remembering the terminal pin-’OUT’ of the ‘‘old’’ wires.

Note: *The wires colour of the supplied wiring harness it is the same of the ones from the ‘‘old’’ cable*.

Chapter 4 Connection Tables for 7-poles connectors.

Section 4.1 Comelec 7-poles IN to Harting 10-poles IN

Signal	Color (Standard)	'old' 7-Poles pin'OUT'	New 10-Poles pin'OUT'
VCC	Black	1A	1
VCC	Black	2B	6
GND	Black	3C	2
GND	Y/G	4D	7
CAN_H	Brown	5E	8
CAN_L	White	6F	3
SHIELD	/	7G	9
empty	/	n.c	4
empty	/	n.c	5
empty	/	n.c	10

Table V: Conversion table for connector IN.

Section 4.1 Comelec 7-poles 'OUT' to Harting 10-poles 'OUT'

Signal	Color (Standard)	'old' 7-Poles pin'OUT'	New 10-Poles pin'OUT'
VCC	Black	1A	1
VCC	Black	2B	6
GND	Black	3C	2
GND	Y/G	4D	7
CAN_H	Brown	5E	8
CAN_L	White	6F	3
SHIELD	/	7G	9
empty	/	n.c	4
empty	/	n.c	5
empty	/	n.c	10

Table VI: Conversion table for connector 'OUT'.

Appendix ‘A’